52-12864-01

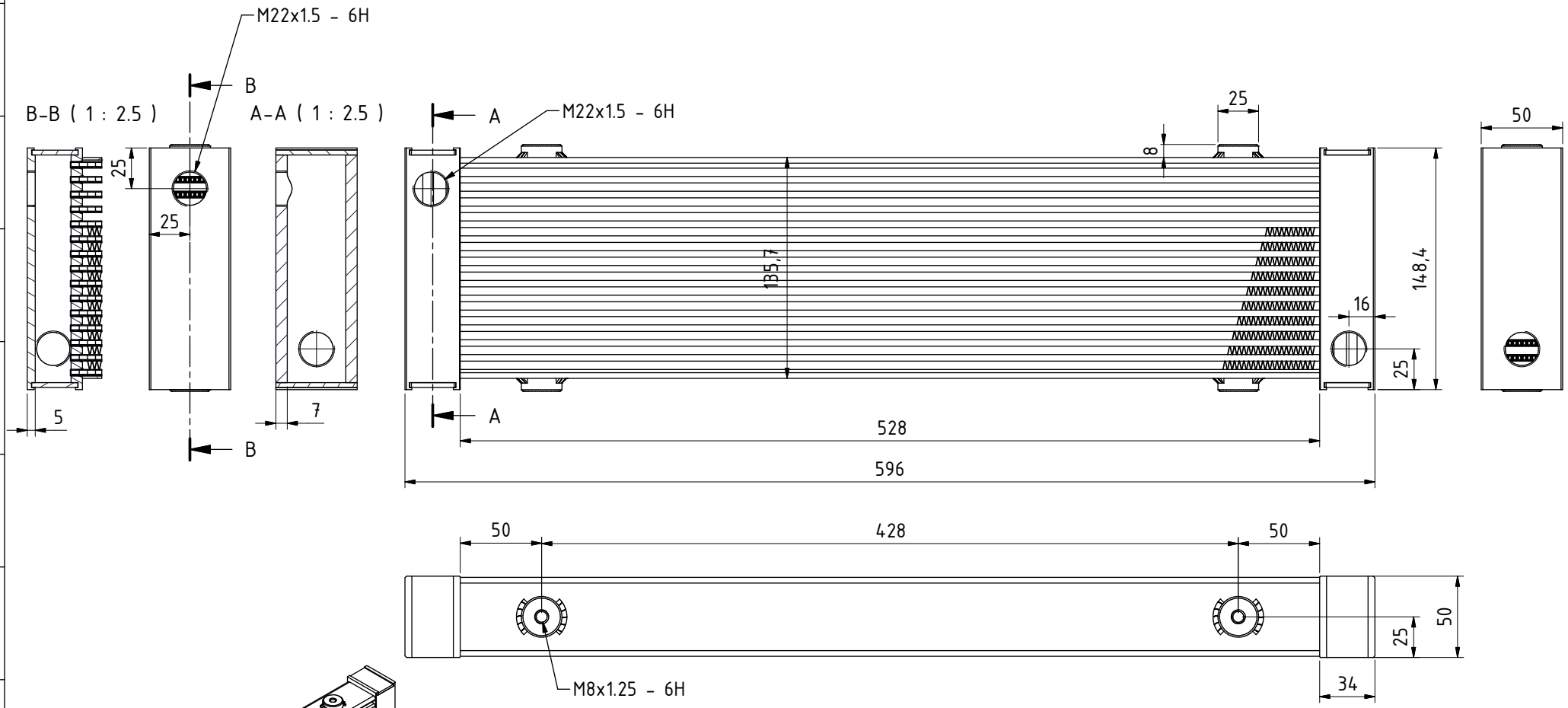

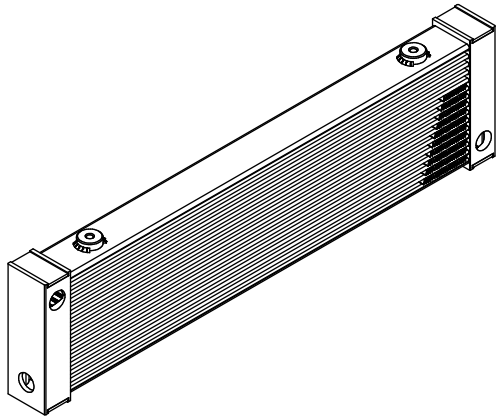

Note:
Use thread sealing / thread locking adhesive when mounting Proline adapters to COM coolers.

X= APPROVAL WITH REMARKS IN DR (BL-0006)

TOLERANCE CLASS: ISO 2768-v	0.5 up to 3	over 3 up to 6	over 6 up to 30	over 30 up to 120	over 120 up to 400	over 400 up to 1000
PERMISSIBLE DEVIATIONS FOR LINEAR DIMENSIONS EXCEPT FOR BROKEN EDGES. (mm)	-	±0.5	±1	±1.5	±2.5	±4

THEORETICAL WEIGHT	2,80 kg
THEORETICAL VOLUME	1,1 L
WORKING PRESSURE	16 Bar
PRESSURE TEST	
LEAKAGE TEST	4Bar
BURST PRESSURE	
TECH. SPEC. ACC. TO	
PAINT	Black Epoxy
PAINT THICKNESS	100±30µm
CONNECTION MAX. TIGHTENING TORQUE	
COUNTERACTING SPANNER MUST BE USED WHEN TIGHTENING CONNECTIONS	

FINS/TURB	C/4	ALL MEASUREMENTS REFER TO PAINTED OBJECT		FORMAT	A3	E	X	Date	Sign
DRAWN BY / DATE/SIGN	2016-05-17 ROK	TOLERANCES WHERE NOT SPECIFIED	ISO 2768-v	PAGE	SCALE 1:2.5	CA CUSTOMER APPROVAL			
APPROVAL / DATE/SIGN		DENOMINATION				PT PROTOTYPE			
DESIGN ENGINEER		528COMF-15 C4							
PROCESS ENGINEER		OILCOOLER				PS PRE SERIES			
QUALITY									
SALES		THIS DRAWING HAS BEEN PRODUCED ON INVENTOR				S SERIES			
CUSTOMER/CUSTOMER PART No.	Proline	Setrab OilCoolers Malmö - Sweden Tel +46 (0)40 158060 Fax +46 (0)40 155287				DRAWING NO 52-12864-01			ISSUE